Control of an Interlinking Converter Connected to AC and DC Microgrids

Dave Figueroa

May 2025

What is studied?

- A Hybrid distribution transformer (HDT) can be used to improve the power quality of a distribution network and to extend the lifespan of the distribution transformer (DT).
- The way to make control to the HDT is separated.
  - One LQR control for the series converter.
  - One multi-resonant state-feedback control for the parallel converter.

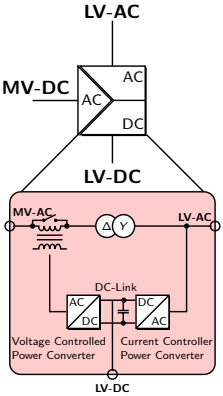

Fig. 1: Hybrid distribution Transformer.

What is studied?

- A Hybrid distribution transformer (HDT) can be used to improve the power quality of a distribution network and to extend the lifespan of the distribution transformer (DT).
- The way to make control to the HDT is separated.
  - One LQR control for the series converter.
  - One multi-resonant state-feedback control for the parallel converter.

Observations

- This can be unified in only one controller (which could be called "Internal Control Loop").

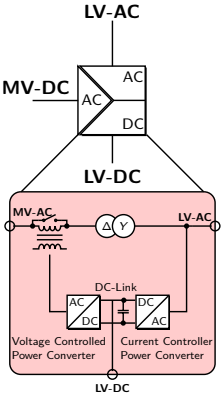

Fig. 1: Hybrid distribution Transformer.

Hybrid Distribution Transformer

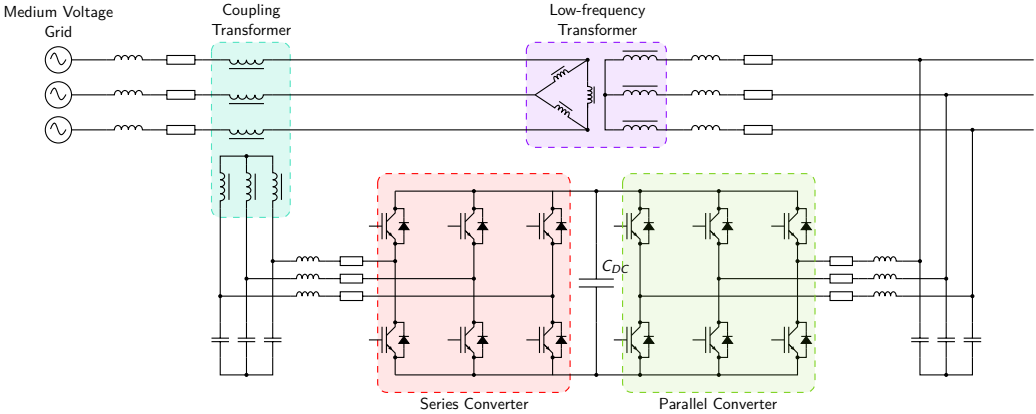

Fig. 2: HDT Schematic.

Hybrid Distribution Transformer

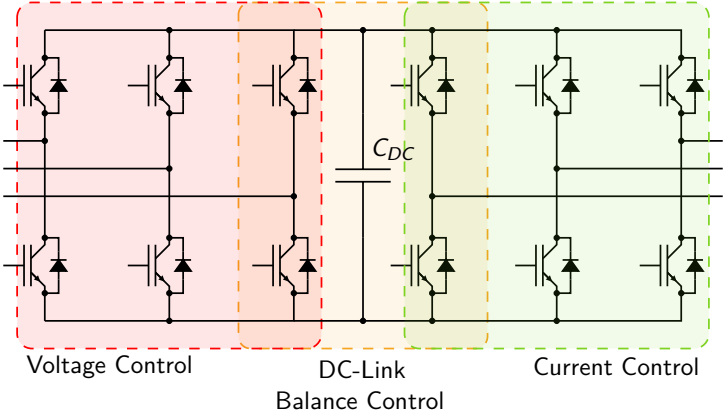

Fig. 3: HDT Control Scheme.

HDT as an Interlinking Converter

- The HDT issue of circulating active power flow (CAPF) can be eliminated if a DC microgrid (DC-MG) is connected to the DC-Link of both voltage and current converters.
- This enables the HDT to act as an interlinking converter (IC) between these two MGs.

HDT as an Interlinking Converter

- The HDT issue of circulating active power flow (CAPF) can be eliminated if a DC microgrid (DC-MG) is connected to the DC-Link of both voltage and current converters.
- This enables the HDT to act as an interlinking converter (IC) between these two MGs.

Observations

- This allows the IC to be controlled by a hierarchical control for MGs (which will have the internal control nested to it).

HDT as an Interlinking Converter

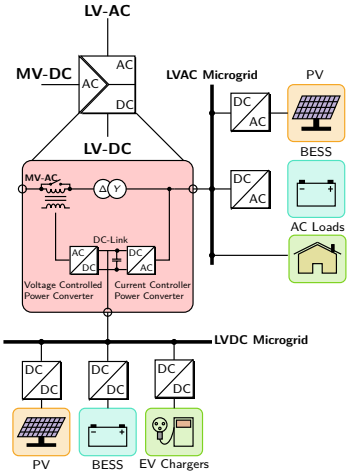

Fig. 4: Hybrid microgrid with the HDT as an interlinking converter.

Hierarchical Control of Microgrids

Primary Control

- Stabilize the amplitude voltage and frequency of the microgrid.
- Provide capacity for the distributed energy resource (DER) to connect and disconnect from the grid.
- Protect the converter.

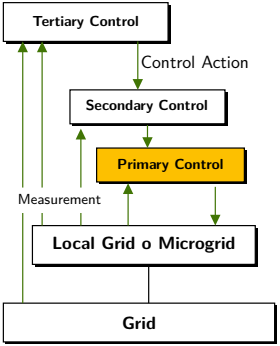

Fig. 5: Microgrid hierarchical control.

Hierarchical Control of Microgrids

Secondary Control

- Gives the nominal operating point for the primary control.
- Provides the ability for the DER to contribute active power to the main grid.

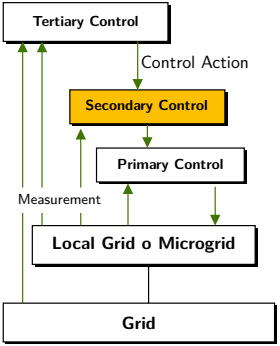

Fig. 5: Microgrid hierarchical control.

Hierarchical Control of Microgrids

Tertiary Control

- Coordinates power dispatch to the main grid.

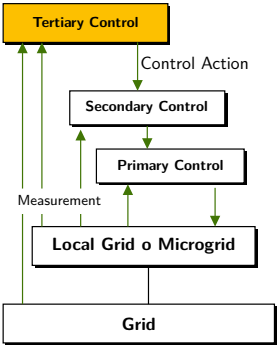

Fig. 5: Microgrid hierarchical control.

Other Ways to Make Control of the Internal Loop of IC

- Model predictive control (MPC)
  - It is a control strategy that uses a model of the system to predict its future behavior and optimize the control inputs accordingly.
  - One of the key advantages of MPC is its ability to impose restrictions on either the states and/or the control inputs.
  - This makes it useful if the objective is to protect the IC.
- Reinforcement learning (RL)
  - It is a type of machine learning that focuses on how agents should take actions in an environment to maximize a cumulative reward.
  - RL has been successfully applied to various control problems, including power systems.
  - The main advantage of RL is its ability to learn from experience and adapt to changing conditions.

HDTs as a Promising Solution for AC and DC Microgrids Integration

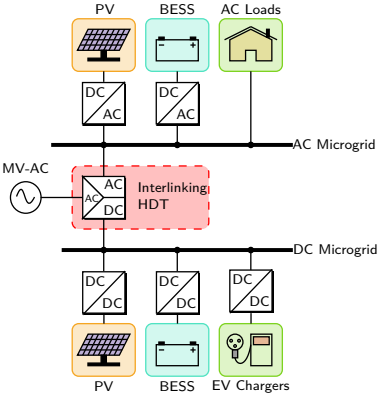

Fig. 6: Integration between AC and DC microgrids through a HDT.

Control of an Interlinking Converter Connected to AC and DC Microgrids

Dave Figueroa

May 2025